ROWLINSON
GARDEN PRODUCTS

LODGE ADIRONDACK CHAIR

ASSEMBLY INSTRUCTIONS

ROWLINSON GARDEN PRODUCTS LIMITED
Green Lane
Wardle, Nr. Nantwich
Cheshire
CW5 6BN
Help Line (Normal Office Hours) 01829 261 121

SS 302

PLEASE READ COMPLETELY BEFORE YOU BEGIN ASSEMBLING

HARDWARE LIST

A 1 1/4" Bolts (8)

B 1 1/4" Screws (12)

C 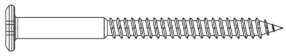 1 ½"Lag Bolt (4)

Allen Wrench (2)

A&D 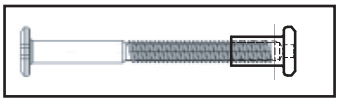 (8)

OTTOMAN INSTRUCTIONS

A 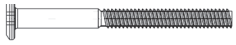 1 1/4 "Bolts (4)

Allen Wrench (2)

B Sleeve nuts (4)

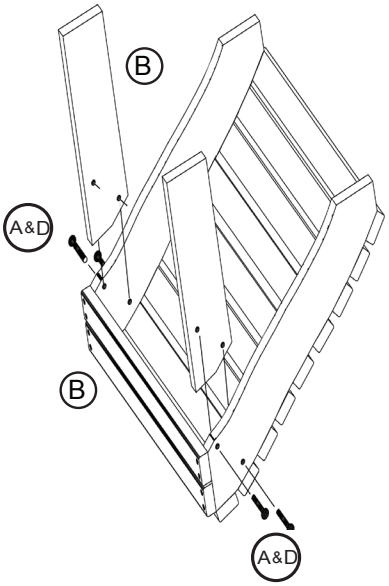

PARTS LIST

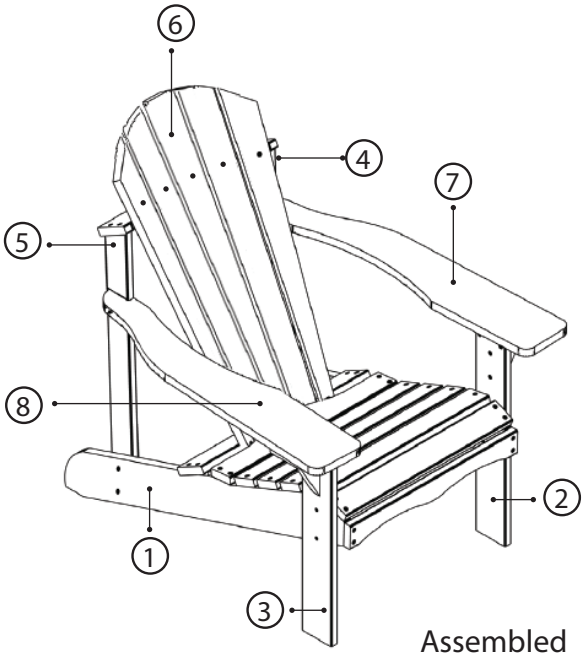

Assembled

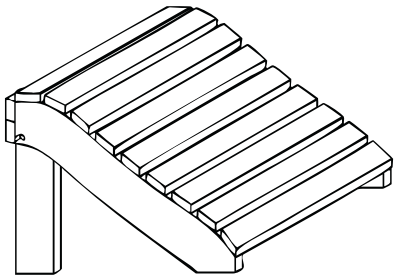

Assembled

STEP 1

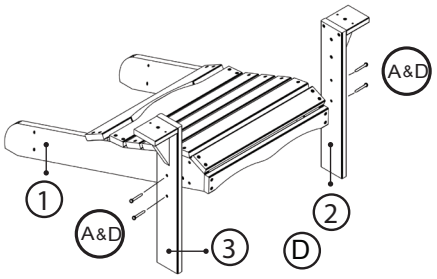

STEP 2

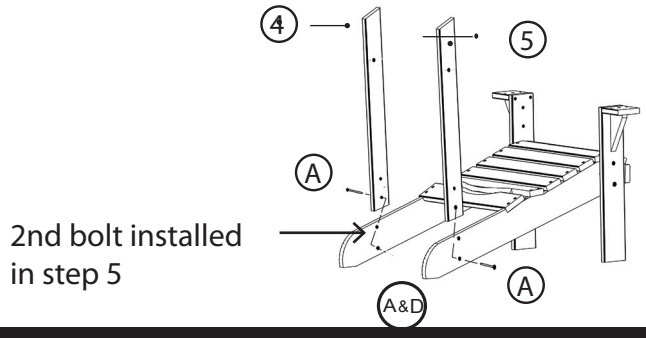

STEP 3

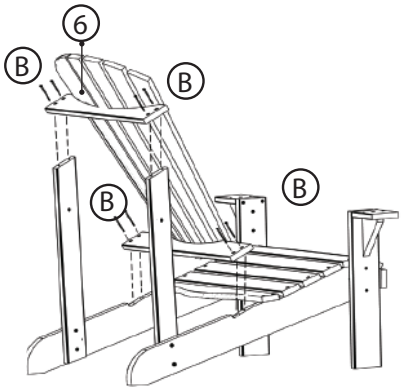

STEP 4

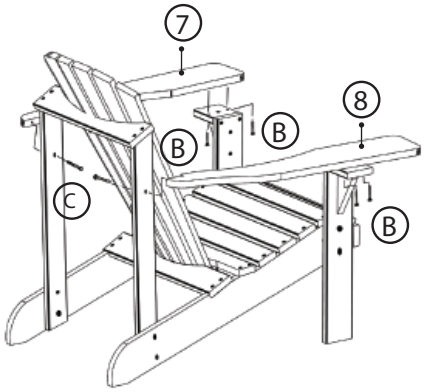

STEP 5

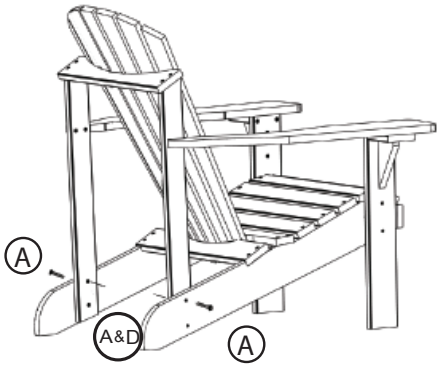

We constantly improve the quality of our products, occasionally the components may differ from the components shown and are only correct at time of printing. We reserve the right to change the specification of our products without prior notice.

2013 © Rowlinson Garden Products Ltd

Hardwood Garden Furniture Care Sheet

Please retain this document for future reference

This product should provide years of enjoyment. It is made from natural raw material and it is therefore important that you understand the characteristics of hardwood timber.

Exposure to the Elements

During prolonged periods of dry weather, you may notice surface cracks appearing in the furniture. This is quite normal and is not detrimental to the strength of the furniture. These surface cracks will close up again in time.
During periods of prolonged wet weather or high humidity, the timber may swell resulting in components temporarily distorting. Again these will return to their original state when they dry out and will not effect the strength of the furniture.

Maintenance and Protection

Left untreated, hardwood furniture will become grey in colour. If you wish to retain the original colouration, you must treat the product with a suitable branded furniture stain at least once a year. For best results, lightly sand the surface of your furniture with a fine grade sandpaper *in the direction of the grain* to remove any surface staining. Wipe off any dust and then apply the treatment with a soft cloth following application guidelines from the stain manufacturer.

IMPORTANT:

- **Ensure that the furniture does not become wet until the stain is completely dry as the stain may leach onto your patio or garden. During the first 3-4 weeks, rainwater can wash off some of the oil applied by the factory to the furniture. To prevent patio surfaces from being stained, the furniture should be placed either on a protective cover or a surface that will not stain during this period.**

If you are unable to store your furniture in a garage or shed during the winter months or periods of prolonged wet weather, it is strongly recommended that you cover the furniture with a suitable waterproof furniture cover [available in store].

Safety

These products have been tested to the appropriate British and European standards for strength and stability to ensure that they are fit for purpose. However, you should pay attention to the following:-

1. Read and follow assembly instructions closely.
2. Periodically check bolts and fittings for tightness as they may work loose over time, taking care not to over tighten fittings as this may split the timber. For this reason, we **do not** recommend the use of power tools to assemble your furniture.
3. Always place chairs and tables on a level surface.
4. When using parasols in conjunction with any tables, please ensure that a suitably weighted parasol base is used to stabilize the furniture.
5. Rocking and/or continually twisting the torso whilst seated, as well as displacing all your bodyweight to one side of the chair [or a combination of these actions], should be avoided since this may weaken the structural integrity of the chair.

Helpline

Should you experience any problems, need further advice or require replacement fixings then please contact the customer service help line or email support below.

ROWLINSON®
GARDEN PRODUCTS

Helpline: 01829 261121
Email: support@rowgar.co.uk
Web: www.rowgar.co.uk